Butterfly Valves: Double Flanged, Lug- and Wafer-Type

API STANDARD 609
SIXTH EDITION, MAY 2004

American Petroleum Institute

Helping You Get The Job Done Right.SM

Copyright American Petroleum Institute
Reproduced by IHS under license with API
No reproduction or networking permitted without license from IHS

Not for Resale

SPECIAL NOTES

API publications necessarily address problems of a general nature. With respect to particular circumstances, local, state, and federal laws and regulations should be reviewed.

API is not undertaking to meet the duties of employers, manufacturers, or suppliers to warn and properly train and equip their employees, and others exposed, concerning health and safety risks and precautions, nor undertaking their obligations under local, state, or federal laws.

Information concerning safety and health risks and proper precautions with respect to particular materials and conditions should be obtained from the employer, the manufacturer or supplier of that material, or the material safety data sheet.

Nothing contained in any API publication is to be construed as granting any right, by implication or otherwise, for the manufacture, sale, or use of any method, apparatus, or product covered by letters patent. Neither should anything contained in the publication be construed as insuring anyone against liability for infringement of letters patent.

Generally, API standards are reviewed and revised, reaffirmed, or withdrawn at least every five years. Sometimes a one-time extension of up to two years will be added to this review cycle. This publication will no longer be in effect five years after its publication date as an operative API standard or, where an extension has been granted, upon republication. Status of the publication can be ascertained from the API Standards department telephone (202) 682-8000. A catalog of API publications, programs and services is published annually and updated biannually by API, and available through Global Engineering Documents, 15 Inverness Way East, M/S C303B, Englewood, CO 80112-5776.

This document was produced under API standardization procedures that ensure appropriate notification and participation in the developmental process and is designated as an API standard. Questions concerning the interpretation of the content of this standard or comments and questions concerning the procedures under which this standard was developed should be directed in writing to the Director of the Standards department, American Petroleum Institute, 1220 L Street, N.W., Washington, D.C. 20005. Requests for permission to reproduce or translate all or any part of the material published herein should be addressed to the Director, Business Services.

API standards are published to facilitate the broad availability of proven, sound engineering and operating practices. These standards are not intended to obviate the need for applying sound engineering judgment regarding when and where these standards should be utilized. The formulation and publication of API standards is not intended in any way to inhibit anyone from using any other practices.

Any manufacturer marking equipment or materials in conformance with the marking requirements of an API standard is solely responsible for complying with all the applicable requirements of that standard. API does not represent, warrant, or guarantee that such products do in fact conform to the applicable API standard.

All rights reserved. No part of this work may be reproduced, stored in a retrieval system, or transmitted by any means, electronic, mechanical, photocopying, recording, or otherwise, without prior written permission from the publisher. Contact the Publisher, API Publishing Services, 1220 L Street, N.W., Washington, D.C. 20005.

Copyright © 2004 American Petroleum Institute

Copyright American Petroleum Institute
Reproduced by IHS under license with API
No reproduction or networking permitted without license from IHS

Not for Resale

FOREWORD

This standard is a purchase specification for butterfly valves designed for installation between flanges specified in ASME B16.1, B16.5, B16.24, and B16.42, Classes 125-600; MSS SP-44, Class 150; and ASME B16.47 Series A, Class 150 (was MSS SP-44 except for certain materials) or Series B (was API 605), Class 150 for the NPS sizes defined herein.

This standard requires the purchaser to specify certain details and features. Although it is recognized that the purchaser may desire to modify, delete, or amplify sections of this standard, it is strongly recommended that such modifications, deletions, and amplifications be made by supplementing this standard, rather than by rewriting or incorporating sections thereof into another complete standard.

API standards are published as an aid to procurement of standardized equipment and materials. These standards are not intended to inhibit purchasers or producers from purchasing or producing products made to specifications other than those of API.

API publications may be used by anyone desiring to do so. Every effort has been made by the Institute to assure the accuracy and reliability of the data contained in them; however, the Institute makes no representation, warranty, or guarantee in connection with this publication and hereby expressly disclaims any liability or responsibility for loss or damage resulting from its use or for the violation of any federal, state, or municipal regulation with which this publication may conflict.

Suggested revisions are invited and should be submitted to API, Standards department, 1220 L Street, NW, Washington, DC 20005.

Copyright American Petroleum Institute
Reproduced by IHS under license with API
No reproduction or networking permitted without license from IHS
Not for Resale

IMPORTANT INFORMATION CONCERNING USE OF ASBESTOS OR ALTERNATIVE MATERIALS

Asbestos is specified or referenced for certain components of the equipment described in some API standards. It has been of extreme usefulness in minimizing fire hazards associated with petroleum processing. It has also been a universal sealing material, compatible with most refining fluid services.

Certain serious adverse health effects are associated with asbestos, among them the serious and often fatal diseases of lung cancer, asbestosis, and mesothelioma (a cancer of the chest and abdominal linings). The degree of exposure to asbestos varies with the product and the work practices involved.

Consult the most recent edition of the Occupational Safety and Health Administration (OSHA), U.S. Department of Labor, Occupational Safety and Health Standard for Asbestos, Tremolite, Anthophyllite, and Actinolite, 29 Code of Federal Regulations Section 1910.1001; the U.S. Environmental Protection Agency, National Emission Standard for Asbestos, 40 Code of Federal Regulations Sections 61.140 through 61.156; and the U.S. Environmental Protection Agency (EPA) rule on labeling requirements and phased banning of asbestos products (Sections 763.160-179).

There are currently in use and under development a number of substitute materials to replace asbestos in certain applications. Manufacturers and users are encouraged to develop and use effective substitute materials that can meet the specifications for, and operating requirements of, the equipment to which they would apply.

SAFETY AND HEALTH INFORMATION WITH RESPECT TO PARTICULAR PRODUCTS OR MATERIALS CAN BE OBTAINED FROM THE EMPLOYER, THE MANUFACTURER OR SUPPLIER OF THAT PRODUCT OR MATERIAL, OR THE MATERIAL SAFETY DATA SHEET.

Copyright American Petroleum Institute
Reproduced by IHS under license with API
No reproduction or networking permitted without license from IHS
Not for Resale

CONTENTS

Page

1 SCOPE 1

2 REFERENCES 1

3 PRESSURE-TEMPERATURE RATINGS 1
3.1 VALVE RATING 1
3.2 SHELL RATING 1
3.3 SEAT RATING 2
3.4 DIFFERENTIAL PRESSURE RATING 2

4 DESIGN 2
4.1 GENERAL 2
4.2 BODY 2
4.3 FACE-TO-FACE DIMENSIONS 2
4.4 DISC CLEARANCE 3
4.5 SHAFT AND SHAFT SEALS 3
4.6 PIPING CONNECTION EXTERNAL BOLT HOLES 3
4.7 SEAT RETAINER—CATEGORY B VALVES ONLY 3
4.8 OPERATING MECHANISMS 4
4.9 ELECTRICAL CONTINUITY 4
4.10 PACKING GLAND BOLTING (CATEGORY B VALVES ONLY) 4

5 MATERIALS 4
5.1 BODY 4
5.2 TRIM 4
5.3 SEAT RETAINER-CATEGORY B VALVES ONLY 4
5.4 PACKING OR SHAFT SEAL MATERIALS 5
5.5 GLAND BOLTING 5
5.6 OPERATING MECHANISMS—CATEGORY B VALVES ONLY 5

6 EXAMINATION, INSPECTION, AND TESTING 5
6.1 EXAMINATION REQUIREMENTS 5
6.2 INSPECTION BY THE PURCHASER 5
6.3 PRESSURE TESTS 5
6.4 REPAIR OF DEFECTS 5

7 MARKINGS 5

8 PACKAGING AND SHIPPING 6
8.1 COATINGS 6
8.2 SHAFT PACKING 6
8.3 PACKAGING 6
8.4 RECOMMENDED SPARE PARTS 6

APPENDIX A DISC-TO-PIPE CLEARANCES 11

Copyright American Petroleum Institute
Reproduced by IHS under license with API
No reproduction or networking permitted without license from IHS
Not for Resale

CONTENTS

Page

Figures

1 External Bolting Options for Lug- and Wafer-Type Valves 8
2 Limitations for Flange Face Interruptions That Fall Within the Gasket Seating Area (NPS 6 through 48) 9
A-1 Dimensional Locations for Concentric-Type Construction (Category A) 11
A-2 Nomenclature and Explanation of Offset-Seat-Type Construction (Category B) . 12
A-3 Relationship of Unlined Steel Pipe Schedules to Valve Category, Size, and ASME Class 13

Tables

1 Face-to-Face Dimensions for Category A Valves (Lug- and Wafer-Type) 5
2 Face-to-Face Dimensions for Category B Valves 6
3 Minimum Seat Pressure-temperature Ratings for Category B Valves with PTFE or RPTFE Seats 8
A-1 Nominal Radial Clearances 11

Copyright American Petroleum Institute
Reproduced by IHS under license with API
No reproduction or networking permitted without license from IHS
Not for Resale

NOTES TO PURCHASER

1 If the purchaser needs a butterfly valve that deviates from this standard, the deviating requirements shall be stated in the purchase order.

2 If no exceptions are to be taken to this standard, the purchase order need only refer to API Standard 609 and specify the items listed in 2.1 (below) and any optional items listed in 2.2 (below). Paragraph 2.3 lists items where agreement between purchaser and manufacturer is required.

2.1 Required on the Purchase Order

2.1.1 Valve size and class (see 1.1).

2.1.2 Valve Category: A or B (see 1.1).

2.1.3 Type of body style (double flanged, lug- or wafer-type) (see 1.2 and 4.2.1-4.2.3).

2.1.4 For double flanged valves specify either: (a) long pattern (see Table 2-B) or short pattern (see Table 2-C). Note Class 300 short pattern has two sets of dimensions. Purchaser must specify which is required.

2.1.5 Type of mating flange (slip-on, welding-neck, or other), mating flange specification, and flange bore or pipe inside diameter, as applicable. The purchaser should verify disc clearances with the valve manufacturer (see 1.2 and 4.4).

2.1.6 Unidirectional or bidirectional flow and pressure shutoff requirement (see 4.7.3).

2.1.7 Whether dead-end service is required (see 4.7.4).

2.1.8 Operator type: lever or other (see 4.8).

2.1.9 On-off or throttling service (see 3.4 and 4.8.1).

2.1.10 Materials of construction, including those for trim and those for packing or shaft seals (see Section 5).

2.1.11 Operating conditions including maximum operating temperature, flow rate or line velocity, maximum pressure drop, fluid media, and specific gravity (see 4.8.2).

2.2 Items That May Be Specified

2.2.1 Conformance with API Standard 607 for applications where a fire tested valve is required (see 4.1.2).

2.2.2 Lockable device (see 4.1.3).

2.2.3 End flanges attached by welding (see 4.2.3).

2.2.4 Drain or bypass connections (see 4.2.4).

2.2.5 Through drilling or special tapping of lug bolt holes (see 4.6).

2.2.6 Electrical continuity requirement (see 4.9).

2.2.7 Packing or shaft seal materials (see 5.4).

2.2.8 Inspection by the purchaser (see 6.2).

2.2.9 Export packaging (see 8.3).

2.2.10 Special external coating (see 8.1).

2.2.11 Recommended spare parts information (see 8.4).

Copyright American Petroleum Institute
Reproduced by IHS under license with API
No reproduction or networking permitted without license from IHS
Not for Resale

2.3 Where Agreement Between the Purchaser and the Manufacturer is Required

2.3.1 Gasket surface interruptions for NPS 4 and smaller (see 4.7.2).

2.3.2 Seat ratings for materials not listed in Table 3 (see 3.3.1).

2.3.3 Use of welded on body extensions or flanges (See 5.1.2).

3 Refer to API Standard 598 for additional items that may need to be specified, including supplementary examination, the extent of inspection by the purchaser, the inspector's address, and optional high-pressure closure test.

Copyright American Petroleum Institute
Reproduced by IHS under license with API
No reproduction or networking permitted without license from IHS
Not for Resale

Butterfly Valves: Double Flanged, Lug- and Wafer-Type

1 Scope

1.1 This standard covers design, materials, face-to-face dimensions; pressure-temperature ratings; and examination, inspection, and test requirements for gray iron, ductile iron, bronze, steel, nickel-base alloy, or special alloy butterfly valves that provide tight shutoff in the closed position and are suitable for flow regulation. Two categories of butterfly valves are included:

a. Category A: Manufacturer's rated cold working pressure (CWP) butterfly valves, usually with a concentric disc and seat configuration. Sizes covered are NPS 2 to NPS 48 for valves having ASME Class 125 or Class 150 flange bolting patterns.

b. Category B: Pressure-temperature rated butterfly valves that have an offset seat and either an eccentric or a concentric disc configuration. These valves may have a seat rating less than the body rating. For lug and wafer, Class 150, 300, and 600, sizes covered are NPS 3 to NPS 24 . For double flanged long pattern, Class 150, 300, and 600, sizes covered are NPS 3 to NPS 36. For double flanged short pattern, Class 150 and 300, sizes covered are NPS 3 to NPS 48. For double flanged short pattern, Class 600, sizes covered are NPS 3 to NPS 24.

1.2 Valve configurations include double flanged, lug- and wafer-types with facings that permit installation between ASME and MSS flanges that conform to the standards and specifications listed in Section 2.

2 References

The most recent edition or revision of the following standards or specifications shall, to the extent specified in this standard, form a part of this standard. Text in brackets after a publication title indicates a restriction on the classes to which the publication applies.

API

Std 598	*Valve Inspection and Testing*
Std 607	*Fire Test for Soft-Seated Quarter-Turn Valves*

ASME[1]

B1.1	*Unified Inch Screw Threads (UN and UNR Thread Form)*
B16.1	*Cast Iron Pipe Flanges and Flanged Fittings [Class 125 only]*
B16.5	*Pipe Flanges and Flanged Fittings [Class 150, 300, and 600 only]*
B16.20	*Metallic Gaskets for Pipe Flanges-Ring Joint, Spiral Wound, and Jacketed*
B16.24	*Cast Copper Alloy Pipe Flanges and Flanged Fittings [Class 150 and 300]*
B16.34	*Valves-Flanged, Threaded, and Welding End [Standard Class 150, 300, and 600 only]*
B16.42	*Ductile Iron Pipe Flanges and Flanged Fittings, Class 150 and 300*
B16.47	*Large Diameter Steel Flanges: NPS 26 Through NPS 60 [Class 150 only]*
B31.3	*Process Piping*
B46.1	*Surface Texture (Surface Roughness, Waviness, and Lay)*

MSS[2]

SP-6	*Standard Finishes for Contact Faces of Pipe Flanges and Connecting-End Flanges of Valves and Fittings*
SP-25	*Standard Marking System for Valves, Fittings, Flanges, and Unions*
SP-44	*Steel Pipe Line Flanges [Class 150 only]*
SP-45	*Bypass and Drain Connections*
SP-91	*Guidelines For Manual Operation of Valves*

ISO[3]

5752	*Face to Face and Center to Face Dimensions*

3 Pressure-Temperature Ratings

3.1 VALVE RATING

Valves shall have a pressure-temperature rating or cold working pressure rating for Category A valves that is the lesser of its shell rating, seat rating, or differential pressure rating.

3.2 SHELL RATING

3.2.1 Category A valve bodies and related pressure boundary elements shall have the cold working pressure (CWP) rating assigned by the manufacturer.

3.2.2 Category B valve bodies and related pressure boundary elements shall have the pressure-temperature rating as

[1]ASME International, 345 East 47th Street, New York, New York 10017.

[2]Manufacturers Standardization Society of the Valve Fittings Industry, Inc., 127 Park Street, N.E., Vienna, Virginia 22180.

[3]International Organization for Standardization. ISO publications are available from the American National Standards Institute, 11 West 42nd Street, New York, New York 10036.

Copyright American Petroleum Institute
Reproduced by IHS under license with API
No reproduction or networking permitted without license from IHS
Not for Resale

listed in one of the following standards according to the valve's body material:

a. For ductile iron, ASME B16.42.
b. For cast copper alloys, ASME B16.24.
c. For steel, nickel alloy, or special alloy material, ASME B16.34 (Standard Class).

3.3 SEAT RATING

3.3.1 For Category B valves the valve seat ratings for PTFE and RPTFE shall be at least equal to those listed in Table 3. For seating materials not listed in Table 3, seat ratings shall be agreed upon by the purchaser and the manufacturer.

3.3.2 Valves furnished with internal liners, encapsulation, resilient seating materials, or a combination of these features shall have pressure-temperature limits conforming to the valve manufacturer's published specifications. Temperature limits shall be marked on the nameplate as required in 7.1.

3.4 DIFFERENTIAL PRESSURE RATING

A valve's differential pressure rating measures the valves capability to hold pressure from one side either at shutoff or in the partly open position with flow in the line.

4 Design

4.1 GENERAL

4.1.1 Category B Valves

Valves manufactured in accordance with this standard shall meet the requirements of ASME B16.34 for standard class and any additional requirements as specified in this standard. For materials not listed in B16.34, the applicable requirements and design rules of B16.34 shall be used. In the event of a conflict between ASME B16.34 and this standard, this standard shall prevail.

4.1.2 Fire Tested Valves

If the purchaser specifies fire tested valves, the valves shall be certified to have been tested to, and met, all of the performance requirements of API Standard 607. Supporting documentation shall be made available to the purchaser upon request.

4.1.3 Lockable Device

When specified in the purchase order, valves shall be furnished with a lockable device that accepts a purchaser-supplied lock that enables the valve to be locked in both the open and closed positions. The lockable device shall be designed such that a lock with a $^{5}/_{16}$-in. (8-mm) diameter shank, not more than 4 in. (100 mm) long, can be inserted directly through appropriate holes and locked. Provisions for a lockable device are permitted even when it is not specified in the purchase order.

4.1.4 Disc Position Indication

The indication of the position of the disc shall be integral with the valve shaft. The indication may be accomplished by a mark on the shaft or by a shaft shape. The design shall ensure that a valve (and/or operator) cannot be assembled to falsely indicate the valve's open and closed positions.

4.1.5 Shaft-to-Lever Connections

Shaft-to-lever connections shall be designed so that the lever always correctly indicates the disc position.

4.2 BODY

4.2.1 The minimum body-wall thickness shall comply with the applicable ASME B16 standard listed in Section 2 based on the body material. If the applicable standard covers fittings for a particular material, the valve minimum wall thickness shall be as specified for fittings. The valve design shall be structurally suitable for its stated pressure and temperature limits, taking into account that localized thinning may be necessary between the shaft bore in the body and the adjacent bolt holes. Such sections shall be designed in accordance with the requirements of ASME B16.34.

4.2.2 When a wafer-type valve is installed between piping flanges and the disc is in the closed position, the valve shall be self-centering, that is, designed to center itself within the bolt circle by using the valve's outside diameter, or by means of integral or attached alignment devices.

4.2.3 End flanges for double flanged valves shall be integrally cast or forged with the body; however, flanges may be attached by full-penetration butt welding if agreed to by the purchaser. End flanges attached by welding shall conform to ASME B16.5 and have butt-welding ends for use without backing rings. Welds shall conform to ASME B31.3, as shall qualifications for the welding procedure and the welder or welding operator. The finished weld thickness shall not be less than the minimum body-wall thickness.

4.2.4 If drain or bypass connections are specified by the purchaser, they shall conform to ASME B16.34 or MSS SP-45, as applicable.

4.3 FACE-TO-FACE DIMENSIONS

4.3.1 Face-to-face dimensions for lug- and wafer-type valves shall be as listed in Tables 1 and 2-A. These dimensions are either: (a) the compressed or installed dimensions of valves that use nonmetallic liners, sleeves, or auxiliary seals extending from or over the body contact faces and acting as

Copyright American Petroleum Institute
Reproduced by IHS under license with API
No reproduction or networking permitted without license from IHS
Not for Resale

flange-sealing elements, or (b) the metal-to-metal dimensions of valves that do not use such nonmetallic components.

Note 1: When valve body liners, sleeves, or O-ring seals act as flange-sealing surfaces, separate gaskets should not be used unless specifically recommended by the manufacturer.

Note 2: Valves with liners that extend to the gasket seating surfaces should be bolted up with the disc in the partially open position.

4.3.2 Face-to-face dimensions for double flanged valves are listed in Table 2-B for long pattern valves, or Table 2-C for short pattern valves.

4.3.3 Body contact faces of cast iron, ductile iron, and cast copper alloy valves that require separate gaskets shall be finished as specified in MSS SP-6.

4.3.4 Body contact faces of steel or alloy valves that require separate gaskets shall be finished as specified in ASME B16.5.

4.4 DISC CLEARANCE

The manufacturer shall design the valve disc to provide suitable clearance, in accordance with the ASME class rating for the valve, the inside diameter of the connecting pipe or flange, and the criteria covered in the appendix to this standard.

Note: For lug- and wafer-type valves and some double flanged designs, the disc will project beyond the body faces when the disc is turned. The purchaser should review the design of the piping to ensure that there will be no interference between the disc and adjacent components such as the pipe lining, strainers, check valves, and other valves. During valve installation, the mating flanges shall be aligned before final tightening of the flange bolts to ensure proper valve operation and the seating of any seals and gaskets.

4.5 SHAFT AND SHAFT SEALS

4.5.1 The shaft to disc connection and all parts of the shaft within the pressure boundary shall, under torsional load, exceed the strength of the shaft that lies outside the pressure boundary by more than 10%. The determination of shaft strength shall be by calculation or testing.

4.5.2 The shaft and/or shaft retention shall be designed so that, if failure of the shaft to disc connection or of the shaft occurs, no portion of the shaft can be ejected from the valve as a result of internal pressure. The design shall not rely on actuation components (e.g., gear operators, actuators, levers, etc.) to prevent shaft ejection.

4.5.3 The shaft-to-disc connection shall be designed to prevent loosening due to vibration.

4.5.4 For Category B valves, the shaft shall have a surface finish of 32 microinches (0.80 micrometers) Ra or smoother in the area in contact with the packing, and the stuffing box shall have a surface finish of 125 microinches (3.2 micrometers) Ra or smoother. Measurement may be by visual and tactile comparison or by use of a stylus-type surface roughness measuring instrument (ASME B46.1).

4.5.5 Category B valves shall have adjustable shaft packing. The packing mechanism shall allow packing adjustment while the valve is pressurized with line fluid.

4.6 PIPING CONNECTION EXTERNAL BOLT HOLES

4.6.1 Unless specified otherwise in the purchase order, lugs of lug-type valves shall be provided with tapped holes for studs or bolts.

4.6.2 Threaded body-flange holes for bolts 1 inch or less in diameter shall be drilled and tapped in accordance with ASME B1.1, coarse-thread series, Class 2B. For bolts $1^1/_8$ inches or more in diameter, such holes shall be drilled and tapped in accordance with ASME B1.1, eight-thread series, Class 2B.

4.6.3 Threaded bolt holes shall allow full thread engagement to a depth at least equal to the nominal bolt diameter; however, when the bolt hole is adjacent to the shaft, engagement to a depth of 67% of the nominal bolt diameter is acceptable.

4.6.4 Typical bolting options for lug- and wafer- type valves are shown in Figure 1.

4.7 SEAT RETAINER—CATEGORY B VALVES ONLY

4.7.1 Seat retainer plates (designed per Figure 2) are separate plates intended to retain and compress the valve seat and shall be mechanically fastened to the valve body. Retaining fasteners shall be recessed to or below the flange gasket surface.

4.7.2 Gasket seating surface interruptions: Interruptions in the seating area of a centered ASME B16.20 spiral wound gasket for valve sizes NPS 6 through 48 shall not exceed the limitations given in Figure 2. The permissible surface interruptions on smaller size valves shall be as agreed between purchaser and manufacturer but shall not exceed 50% of the gasket seating width.

Note: The degree of interruption may affect the sealability of a spiral-wound gasket.

4.7.3 All components of lug-type and double flanged valves designated as suitable for bidirectional dead-end service shall be designed for the valve's differential pressure rating.

4.7.4 Valves designated as suitable for bidirectional dead-end service shall be designed such that the seat retainer plate and retaining fasteners shall be capable of withstanding the maximum differential pressure rating with the flange on the seat retainer side removed. (Lug-type valves with no interruptions of the gasket seating surface may be suitable for dead-

Copyright American Petroleum Institute
Reproduced by IHS under license with API
No reproduction or networking permitted without license from IHS
Not for Resale

end service only when installed with the seat retainer plate on the pressure side.)

Note: Dead-end service is the condition that may occur after the companion flange and piping are removed from one side of a lug-type valve with threaded lug bolt holes or from a double flanged valve. Whenever this is done with equipment in operation, suitable precautions are recommended.

For valves that are not fully rated, each size and pressure class of threaded-lug or double flanged butterfly valve, the manufacturer shall perform prototypical tests in both flow directions to determine the maximum pressure (up to 1.1 times the valve's rated differential pressure) that produces a leak rate acceptable per API Standard 598 for each flow direction (or a single flow direction for unidirectional valves). For bidirectional dead-end service valves, tests shall be performed with the seat retainer side of the prototypical test valve fully unrestrained. For unidirectional dead-end service valves, test shall be performed with the downstream side of the prototypical test valve fully unrestrained.

Based on these tests, the manufacturer shall mark each valve stating maximum bidirectional dead-end pressure *xxx,* where *xxx* represents 90% of the lowest pressure in either flow direction determined from the prototypical tests. For unidirectional valves the marking shall be maximum unidirectional dead-end pressure *xxx,* where *xxx* represents 90% of the lowest pressure in the appropriate direction determined from the prototypical tests. Additionally, the manufacturer will include this information in catalogs and installation, maintenance, and operating documents.

4.8 OPERATING MECHANISMS

4.8.1 Levers, gear operators, handwheel, and automatic actuators shall be equipped with provisions to prevent movement of the disc from the desired set position during normal operating conditions. Normal operating conditions include throttling service when specified by the purchaser.

4.8.2 In addition to the requirements of the valve design, torque requirements for operation vary considerably with changes in flow media, operating pressure, and fluid velocity. Conditions under which valves are to be operated must be specified by the purchaser and carefully evaluated by the manufacturer to determine the maximum resultant torque. Actuators shall be compatible with the operating torque requirements.

4.8.3 Valves shall be closed by turning the shaft and attached operating device (such as a handle) in the clockwise direction.

4.8.4 The operating mechanism (wrench or gear) shall be designed such that the operator input force required to operate the valve at the manufacturer's published torque requirement, does not exceed the operator input force capability values given in MSS SP-91, using a position multiplier of 0.5. In no case shall the input force exceed 80 lbs. (360 N).

4.9 ELECTRICAL CONTINUITY

When specified in the purchase order, valves shall incorporate an electrostatic feature that ensures electrical continuity between the shaft and the body or the shaft, body, and disc. The valve shall have electrical continuity across the discharge path, with a resistance of not more than 10 ohms. To test for continuity, a new dry valve shall be cycled at least five times, and the resistance shall be measured using a DC power source not exceeding 12 volts.

4.10 PACKING GLAND BOLTING (CATEGORY B VALVES ONLY)

4.10.1 When used, gland bolting shall pass through holes in the gland. The use of open slots is not permitted in the cover flange, cover, adjuster, or gland.

4.10.2 Packing gland bolts shall be designed so that the bolt stresses shall not exceed one third ($^1/_3$) of the minimum ultimate tensile strength of the bolt with a packing stress of 5500 psi (380 bar) and a gland bolt temperature of 100°F (38°C).

5 Materials

5.1 BODY

5.1.1 The bodies of double flanged, lug- and wafer-type butterfly valves shall be made of a material conforming to a purchaser-selected material specification in accordance with the applicable ASME standard listed in Section 2.

5.2 TRIM

5.2.1 All wetted materials shall be the manufacturer's standard unless the purchaser specifies otherwise. Trim is defined as the seating surfaces of the body, disc, disc to shaft connection hardware (e.g., keys, pins, screws, etc.) and any internal fasteners that are in contact with the process fluid. Shaft and bushing materials shall be determined by the manufacturer, taking into account similar corrosion properties as the trim selection while also meeting design requirements of Section 4.5.

5.2.2 Seats in the body and on the disc may be either separate or integral. Facings may be applied to valve bodies, discs, or both as deposited metal, integral metal, mechanically retained metal, or resilient materials.

5.2.3 Trim shall not be welded to cast or ductile iron.

5.3 SEAT RETAINER-CATEGORY B VALVES ONLY

Seat retainer plates, if applicable, shall be of the same nominal chemical composition as the body material. Retain-

Copyright American Petroleum Institute
Reproduced by IHS under license with API
No reproduction or networking permitted without license from IHS
Not for Resale

ing fasteners shall be at least intermediate strength as defined in ASME B16.5.

5.4 PACKING OR SHAFT SEAL MATERIALS

Packing or shaft seal materials shall be suitable for the specified service at the valve's pressure-temperature rating and shall be the manufacturer's choice, unless otherwise specified in the purchase order.

5.5 GLAND BOLTING

Gland bolts shall be at least intermediate strength as defined in ASME B16.5.

5.6 OPERATING MECHANISMS—CATEGORY B VALVES ONLY

To prevent change of valve position, particularly in the case of a fire, materials for the valve handle position device shall have a melting temperature of 1400°F (760°C) or higher.

6 Examination, Inspection, and Testing

6.1 EXAMINATION REQUIREMENTS

The manufacturer shall examine all valves as specified in API Standard 598.

6.2 INSPECTION BY THE PURCHASER

If inspection by the purchaser is specified in the purchase order and a detailed procedure is not included, inspection shall be in accordance with API Standard 598. If inspection is not specified in the purchase order, the valve shall be capable of meeting the inspection requirements described in API Standard 598.

6.3 PRESSURE TESTS

Each valve shall be pressure tested as specified in API Standard 598.

6.4 REPAIR OF DEFECTS

6.4.1 When examination, inspection, or testing reveals defects in the body of a steel or alloy valve, the defects shall be repaired by the ASTM standard specified in the purchase order. If none is specified, the defects may be repaired as permitted by the most applicable ASTM material specification listed in Table 1 of ASME B16.34.

6.4.2 When examination, inspection, or testing reveals defects in the body of a nonferrous valve, the defects may be repaired as permitted by the applicable ASTM specification for the material.

Table 1—Face-to-Face Dimensions for Category A Valves (Lug- and Wafer-Type)

Valve Size	Face-to-Face Dimensions		Maximum Variance (Plus or Minus)	
(NPS)	Inches	Millimeters	Inches	mm
2	1.69	43	0.06	1.5
$2^{1}/_{2}$	1.81	46	0.06	1.5
3	1.81	46	0.06	1.5
4	2.06	52	0.06	1.5
5	2.19	56	0.06	1.5
6	2.19	56	0.06	1.5
8	2.38	60	0.13	3.3
10	2.69	68	0.13	3.3
12	3.06	78	0.13	3.3
14	3.06	78	0.13	3.3
16	4.00	102	0.13	3.3
18	4.50	114	0.13	3.3
20	5.00	127	0.13	3.3
24	6.06	154	0.13	3.3
30	6.50	165	0.25	6.4
36	7.88	200	0.25	6.4
42	9.88	251	0.25	6.4
48	10.88	276	0.25	6.4

Note: The dimensions listed for NPS 2-24 apply to valves for installation between ASME Class 125 or 150 flanges. NPS 30-48 are limited to installation between ASME Class 125 and 150 flanges, or MSS SP-44 Class 150 flanges (see 4.3.1). These dimensions are across body flats (metal-to-metal).

6.4.3 Welding, brazing, plugging, peening, or impregnation to repair defects in gray iron, ductile iron, or copper alloy castings is not permitted.

7 Markings

7.1 Category B valves of steel, nickel alloy, or special alloy shall be marked in accordance with the requirements of ASME B16.34. All other butterfly valves shall be marked in accordance with MS SSP-25. A nameplate shall be attached to a steel or alloy body by welding or with pins made of a material similar to that permitted for the nameplate. For other valve body materials a nameplate shall be attached to the body by suitable pins. The nameplate shall be made of an 18Cr-8Ni stainless steel or nickel alloy and shall include the following information:

a. Manufacturer's name.
b. Catalog reference number.
c. Size (NPS).
d. ASME body pressure class (for Category B valves).
e. Pressure at 100°F (38°C).
f. Pressure and temperature at maximum allowable temperature as may be determined by other than the shell rating.

Copyright American Petroleum Institute
Reproduced by IHS under license with API
No reproduction or networking permitted without license from IHS Not for Resale

g. Identification of materials, including those used in the body, the trim (see 5.2.1), and any internal liner or encapsulation (see 3.3.2).
h. The marking API 609A or API 609B if the valve complies with this standard.

Note: Valves conforming to ASME B16.34 are required to have B16.34 marked on the nameplate.

7.2 Valves not having the same pressure rating from both directions shall be clearly and permanently marked High Pressure Side in an appropriate location.

7.3 Valves not designed for dead-end service (see 4.7.4) shall be marked Not for Dead-End Service.

7.4 Valves designed for dead-end service in only one direction (see 4.7.4) shall be marked For Unidirectional Dead-End Service Only, and, on the appropriate side, High Pressure Side.

8 Packaging and Shipping

8.1 COATINGS

8.1.1 Machined surfaces of materials that are not rust resistant shall be coated with an easily removable rust preventive.

8.1.2 Unless otherwise specified in the purchase order, the unmachined exterior surfaces of a tested and inspected valve shall be primed and coated in accordance with the manufacturer's standard practice. Nonferrous and austenitic stainless steel valves need not be coated.

8.2 SHAFT PACKING

Valves shall be shipped with the shaft packing installed.

Note: Adjustment of the packing glands may be required before the valves are placed in service.

8.3 PACKAGING

8.3.1 When export packaging is not specified in the purchase order, valves may be shipped loose, palletized, or packed in a box or crate. Valves shall be packaged to prevent damage during shipment.

8.3.2 When export packaging is specified in the purchase order, valves shall be shipped in wooden boxes or crates, individually or collectively, in a manner that will prevent shifting within the package.

8.3.3 Valves shipped with mounted actuators shall be packaged to prevent damage during transit.

8.3.4 Valve ends shall be fully blanked to protect the sealing surfaces and valve internals during shipment and storage. The protective covers shall be wood, wood fiber, plastic, or metal and shall be securely attached to the valve ends by bolting, steel straps, steel clips, or suitable friction-locking devices. Covers shall not be of pressed cardboard (hardboard). Covers shall be designed so that the valves cannot be installed without the complete removal of the covers. Valves packaged in close-fitting corrugated cartons do not require additional end protection.

8.4 RECOMMENDED SPARE PARTS

When specified in the purchase order, the vendor shall submit a complete list of spare parts. The list shall include cross-sectional or assembly-type drawings for the purpose of part number identification.

Table 2—Face-to-Face Dimensions for Category B Valves[a]

Lug- and Wafer-Type

Valve Size (NPS)	Class 150		Class 300		Class 600		Maximum Variance (Plus or Minus)	
	Inches	mm	Inches	mm	Inches	mm	Inches	mm
3	1.88	48	1.88	48	2.12	54	0.13	3.3
4	2.12	54	2.12	54	2.50	64	0.13	3.3
6	2.25	57	2.31	59	3.06	78	0.13	3.3
8	2.50	64	2.88	73	4.00	102	0.13	3.3
10	2.81	71	3.25	83	4.62	117	0.13	3.3
12	3.19	81	3.62	92	5.50	140	0.13	3.3
14	3.62	92	4.62	117	6.12	155	0.13	3.3
16	4.00	102	5.25	133	7.00	178	0.13	3.3
18	4.50	114	5.88	149	7.88	200	0.13	3.3
20	5.00	127	6.25	159	8.50	216	0.13	3.3
24	6.06	154	7.12	181	9.13	232	0.13	3.3

Copyright American Petroleum Institute
Reproduced by IHS under license with API
No reproduction or networking permitted without license from IHS
Not for Resale

Table 2—Face-to-Face Dimensions for Category B Valves (continued)

(B) Double Flanged (Long Pattern)[b]

Valve Class	Class 150		Class 300		Class 600		Maximum Variance (Plus or Minus)	
(NPS)	Inches	mm	Inches	mm	Inches	mm	Inches	mm
3	8.00	203	11.12	282	14.00	356	0.13	3.3
4	9.00	229	12.00	305	17.00	432	0.13	3.3
6	10.50	267	15.88	403	22.00	559	0.13	3.3
8	11.50	292	16.50	418	26.00	660	0.13	3.3
10	13.00	330	18.00	457	31.00	787	0.13	3.3
12	14.00	356	19.75	502	33.00	838	0.13	3.3
14	15.00	381	30.00	762	35.00	889	0.13	3.3
16	16.00	406	33.00	838	39.00	991	0.13	3.3
18	17.00	432	36.00	914	43.00	1092	0.13	3.3
20	18.00	457	39.00	991	47.00	1194	0.13	3.3
24	20.00	508	45.00	1143	55.00	1397	0.16	4.0
26	22.00	559	49.00	1245	57.00	1448	0.16	4.0
28	24.00	610	53.00	1346	61.00	1549	0.16	4.0
30	24.00	610	55.00	1397	65.00	1651	0.16	4.0
32	26.00	660	60.00	1524	70.00	1778	0.16	4.0
36	28.00	711	68.00	1727	82.00	2083	0.19	5.0

(C) Double Flanged (Short Pattern)[c]

Valve Class	Class 150[c] or Class 300[e]		Class 300[d]		Class 600[f]		Maximum Variance (Plus or Minus)	
(NPS)	Inches	mm	Inches	mm	Inches	mm	Inches	mm
3	4.50	114	7.09	180	7.09	180	0.13	3.3
4	5.00	127	7.48	190	7.48	190	0.13	3.3
6	5.50	140	8.27	210	8.27	210	0.13	3.3
8	6.00	152	9.06	230	9.06	230	0.13	3.3
10	6.50	165	9.84	250	9.84	250	0.13	3.3
12	7.00	178	10.63	270	10.63	270	0.13	3.3
14	7.50	190	11.42	290	11.42	290	0.13	3.3
16	8.50	216	12.20	310	12.20	310	0.13	3.3
18	8.75	222	12.99	330	12.99	330	0.13	3.3
20	9.00	229	13.78	350	13.78	350	0.13	3.3
24	10.50	267	15.35	390	15.35	390	0.16	4.0
26	11.50	292	16.14	410	-	-	0.16	4.0
28	11.50	292	16.93	430	-	-	0.16	4.0
30	12.52	318	17.72	450	-	-	0.16	4.0
32	12.52	318	18.50	470	-	-	0.16	4.0
36	12.99	330	20.80	510	-	-	0.19	5.0
38	16.14	410	20.87	530	-	-	0.19	5.0
40	16.14	410	21.65	550	-	-	0.19	5.0
42	16.14	410	22.44	570	-	-	0.24	6.0
48	18.50	470	24.80	630	-	-	0.24	6.0

Note: Due to Class 300 having two sets of dimensions in this table the purchaser shall clearly specify which column is applicable.

See NOTES TO PURCHASER, 2.1d.

a. The dimensions listed are valve metal-to-metal dimensions (see 4.3.1).
b. The dimensions listed agree with ASME B16.10 for flanged gate valves.
c. The dimensions listed agree with ISO 5752 Basic Series 13 , EN 558-2 and EN 593.
d. The dimensions listed agree with ISO 5752 Basic Series 14 , EN 558-2 and EN 593.
e. The dimensions listed agree with ISO 5752 Basic Series 13.
f. The dimensions listed agree with ISO 5752 Basic Series 14.

Copyright American Petroleum Institute
Reproduced by IHS under license with API
No reproduction or networking permitted without license from IHS
Not for Resale

Table 3—Minimum Seat Pressure-temperature Ratings for Category B Valves with PTFE or RPTFE Seats

Temperature °F (°C)	Class 150				Class 300				Class 600	
	PTFE		RPTFE		PTFE		RPTFE		RPTFE	
	psig	bar	psig	bar	psig	bar	psig	bar	psig	bar
-20 to 100 (-29 to 38)	285	19.7	285	19.7	740	51.0	740	51.0	1480	102.0
150 (66)	273	18.8	273	18.8	708	48.8	708	48.8	1300	89.6
200 (93)	260	17.9	260	17.9	550	37.9	675	46.5	900	62.1
250 (121)	245	16.9	245	16.9	425	29.3	530	36.5	700	48.3
300 (149)	230	15.9	230	15.9	300	20.7	390	26.9	550	37.9
350 (177)	140	9.7	215	14.8	175	12.1	250	17.2	400	27.6
400 (204)	50	3.4	100	6.9	50	3.4	100	6.9	250	17.2
450 (232)	-	-	-	-	-	-	-	-	100	6.9
500 (260)	-	-	-	-	-	-	-	-	-	-

Note: PTFE = polytetrafluoroethylene; RPTFE = reinforced polytetrafluoroethylene. See 3.3.1

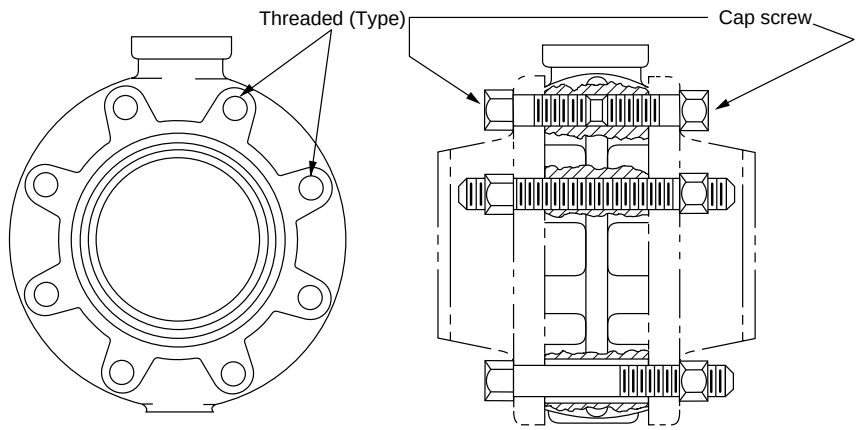

LUG–TYPE VALVE

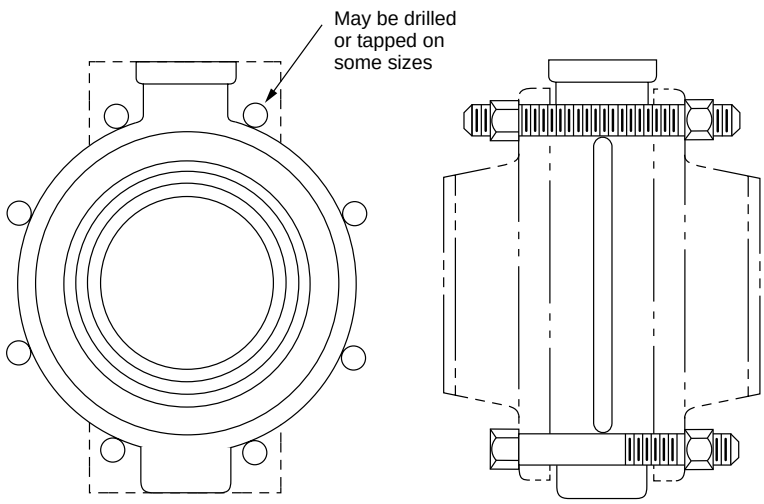

WAFER–TYPE VALVE

Figure 1—External Bolting Options for Lug- and Wafer-Type Valves

Copyright American Petroleum Institute
Reproduced by IHS under license with API
No reproduction or networking permitted without license from IHS
Not for Resale

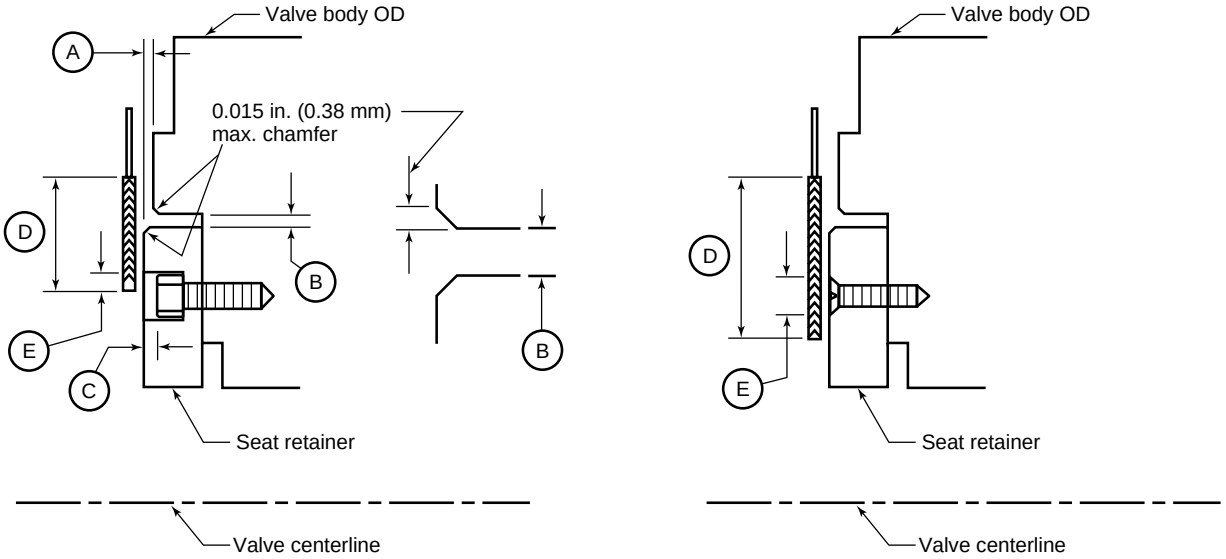

(A) PARTIAL FASTENER OVERLAP **(B) COMPLETE FASTENER OVERLAP**

Dimension	Definition	Range, inches	Range, mm
A	Protrusion of seat retainer plate above valve body face (after being compressed by mating flange). Negative value denotes insert below valve body face.	+0.010 to –0.010	+0.25 to –0.25
B	Radial width of annular gap between valve body and seat retainer plate (exclusive of chamfer).	0.030 max.	0.76 max.
C	Distance of screw head below face of seat retainer plate.	0 to 0.050	0 to 1.27
D	Width of sealing area of spiral-wound gasket for valve's size and rating.	-	-
E	Distance gasket sealing area overlaps fastener opening in face of seat retainer plate (may occur at the ID or OD of the gasket).	35 percent of D (max.)	35 percent of D (max.)

Figure 2—Limitations for Flange Face Interruptions That Fall Within the Gasket Seating Area (NPS 6 through 48)

Copyright American Petroleum Institute
Reproduced by IHS under license with API
No reproduction or networking permitted without license from IHS Not for Resale

Copyright American Petroleum Institute
Reproduced by IHS under license with API
No reproduction or networking permitted without license from IHS
Not for Resale

APPENDIX A—DISC-TO-PIPE CLEARANCES

The maximum diameter of a concentric-type disc for a given size of valve and a given inside diameter of the connecting pipe or flange shall be determined as follows:

First, calculate the chord of the disc with the following equation:

$$a = d - 2c$$

Then use the result to determine the maximum disc diameter with the following equation:

$$D = \sqrt{W^2 + a^2}$$

Where:

a = chord of the disc in an open position, in inches (mm), as determined by the intersection of a plane through the installed face of the valve body (see Figure A-1).

c = nominal radial clearance between the disc and the inside of the pipe or flange, in inches (mm), when the disc and valve are concentrically located (see Table A-1 and Figure A-1).

d = inside diameter of the connecting pipe or flange, in inches (mm). (The inside diameter of the steel pipe may be determined by subtracting twice the nominal wall thickness from the outside diameter, using the appropriate dimensions listed in ASME B36.10M.)

D = maximum disc diameter, in inches (mm).

W = minimum installed face-to-face dimension of the valve, in inches (mm).

Note 1: The calculation above assumes concentric location of the disc and shaft in the valve body. Equivalent nominal radial clearances shall be provided for eccentric or offset shaft construction at all angles of disc rotation.

Note 2: Figure A-1 shows dimensional locations for concentric-type construction. Figure A-2 shows the nomenclature for and explains offset-seat-type construction. Figure A-3 indicates the relationship of unlined steel pipe schedules to valve category, size, and ASME class.

Table A-1—Nominal Radial Clearances

Valve Size (NPS)	Nominal Radial Clearance (c)	
	Inches	Millimeters
2–6	0.06	1.5
8–20	0.12	3.0
24–48	0.25	6.4

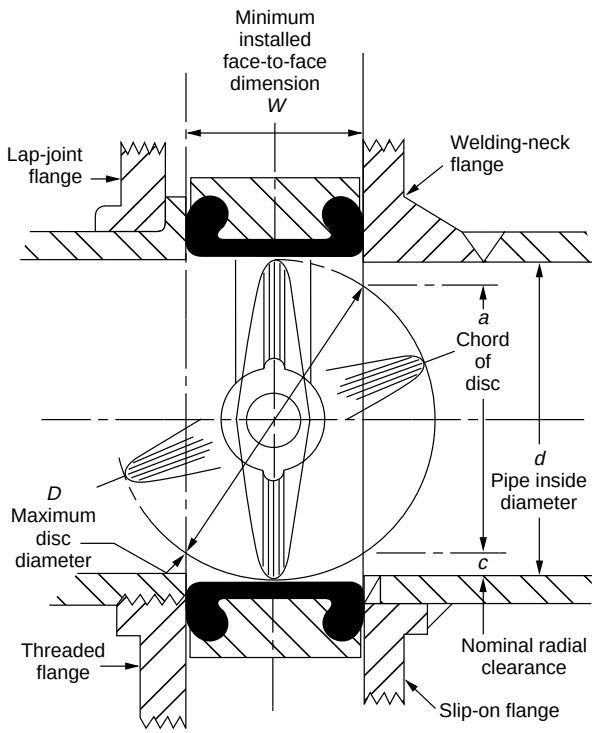

Figure A-1—Dimensional Locations for Concentric-Type Construction (Category A)

Copyright American Petroleum Institute
Reproduced by IHS under license with API
No reproduction or networking permitted without license from IHS
Not for Resale

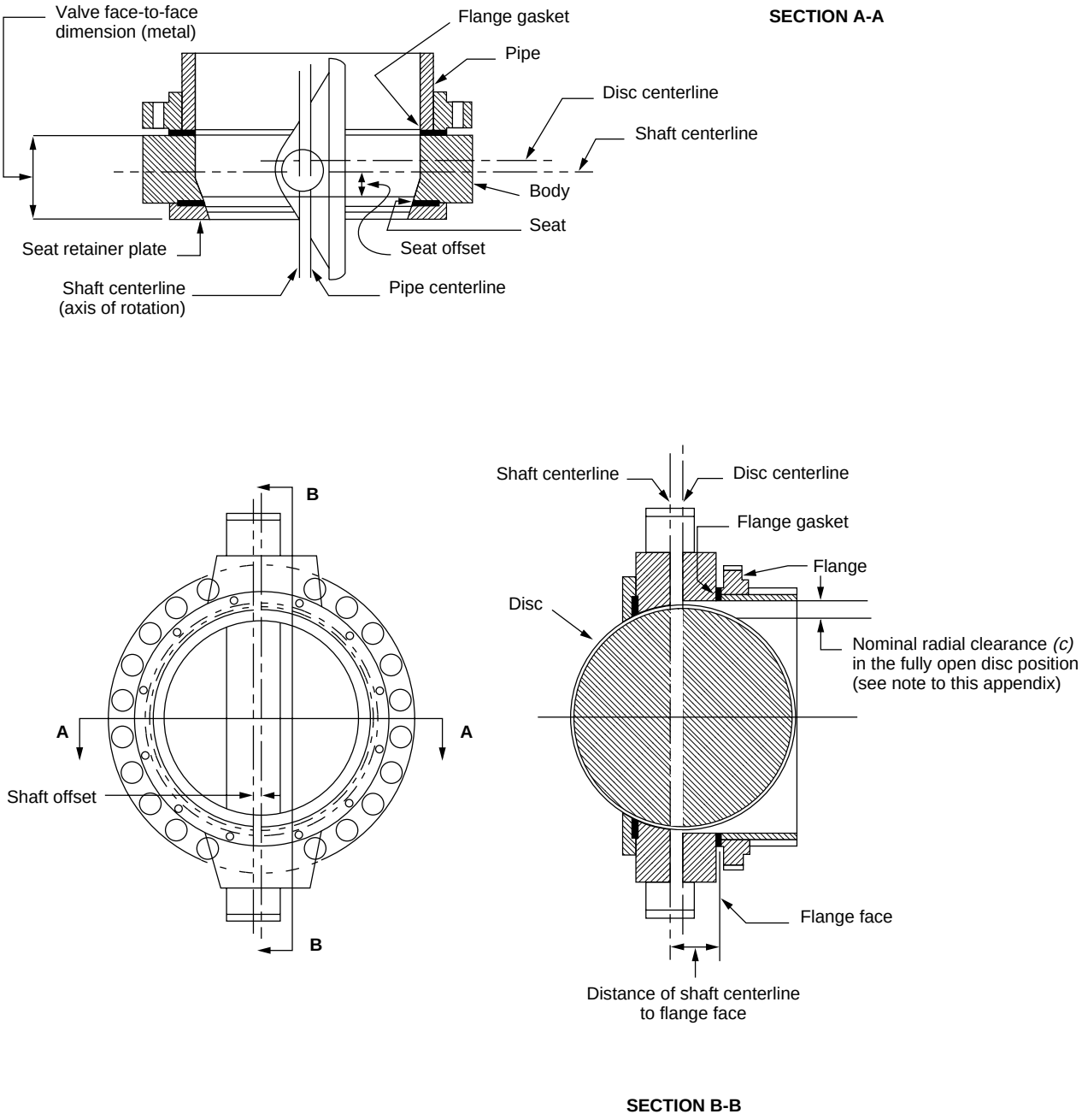

Figure A-2—Nomenclature and Explanation of Offset-Seat-Type Construction (Category B)

Copyright American Petroleum Institute
Reproduced by IHS under license with API
No reproduction or networking permitted without license from IHS
Not for Resale

<table>
<tr><th rowspan="2">Valve Size (NPS)</th><th rowspan="2">Category A</th><th colspan="3">Category B</th></tr>
<tr><th>150</th><th>300</th><th>600</th></tr>
<tr><td>2–2$^1/_2$</td><td rowspan="9">Standard weight</td><td colspan="3">Not applicable</td></tr>
<tr><td>3–4</td><td>Standard weight</td><td colspan="2">Extra strong</td></tr>
<tr><td>5</td><td colspan="3">Not applicable</td></tr>
<tr><td>6</td><td rowspan="5">Standard weight</td><td colspan="2" rowspan="3">Extra strong</td></tr>
<tr><td>8–14</td><td rowspan="4">Schedule 100</td></tr>
<tr><td>16</td></tr>
<tr><td>18–24</td><td colspan="2">Schedule 40</td></tr>
<tr><td>30</td><td colspan="3" rowspan="2">Not applicable</td></tr>
<tr><td>36–48</td><td>Extra strong</td></tr>
</table>

Note: This figure is based on mill tolerance of –12.5 percent and the use of the following pipe materials and corrosions allowances in determining the greater thickness required for the valve class indicated, in accordance with ASME B31.3:

a. Category A—Grade B seamless with a corrosion allowance of 0.125 inch (3.2 millimeters) for NPS 2; Grade B ERW with a corrosion allowance of 0.125 inch (3.2 millimeters) for NPS 2$^1/_2$–48.
b. Class 150— Grade B seamless with a corrosion allowance of 0.125 inch (3.2 millimeters) for NPS 3–24.
c. Class 300—Grade B seamless with a corrosion allowance of 0.125 inch (3.2 millimeters) for NPS 3–18; Grade B ERW with a corrosion allowance of 0.063 inch (1.6 millimeters) for NPS 20–24.
d. Class 600—Grade B seamless with a corrosion allowance of 0.063 inch (1.6 millimeters) for NPS 10–24.

Note: When the purchaser elects to use a greater pipe-wall thickness and/or an internal lining, he shall ensure the proper disc-to-pipe clearance. Categories A and B are defined in 1.1.1.

Figure A-3—Relationship of Unlined Steel Pipe Schedules to Valve Category, Size, and ASME Class

Copyright American Petroleum Institute
Reproduced by IHS under license with API
No reproduction or networking permitted without license from IHS
Not for Resale

Additional copies are available through Global Engineering Documents at (800) 854-7179 or (303) 397-7956

Information about API Publications, Programs and Services is available on the World Wide Web at: http://www.api.org

American Petroleum Institute

1220 L Street, Northwest
Washington, D.C. 20005-4070
202-682-8000

Product No. C60906

Copyright American Petroleum Institute
Reproduced by IHS under license with API
No reproduction or networking permitted without license from IHS
Not for Resale